Stress-Ribbon Roof Structures of the New Stuttgart Trade Fair Exhibition Halls

Guido Ludescher, Consulting Eng.; **Frank Braun,** Eng., **Uwe Bachmann,** Eng.; Mayr + Ludescher Ingenieure, Stuttgart, Germany

Introduction

The New Stuttgart Trade Fair (*Neue Messe Stuttgart*) represents one of the most outstanding recent construction projects in Germany in terms of architectural concept, infrastructure planning, and structural engineering.

The trade fair complex mainly consists of eight exhibition halls, a convention center, and two car parking bridges crossing the motorway.

This paper will deal with the load bearing structures of the seven Standard Exhibition Halls (10000 m² each; *Fig. 1*) and the Grand Exhibition Hall (25000 m²), both being a major contribution to the architectural concept.

After a brief overview of the project, the principle of the stress-ribbon with regard to its application for long-span roofs will be outlined.

Thereafter, the structural systems of the two types of exhibition halls will be illustrated. Here, the main focus will be on topics and details which represent innovations developed specially for these structures. Finally, several aspects concerning fabrication and erection will be covered.

General Project Layout

Location and Infrastructure

The location of the new trade fair near Stuttgart, Germany, in direct vicinity of the airport, the motorway, and the railway, is regarded to be ideal since it is served by all major means of transportation within extremely short distance. It is referred to as the "fair of short paths" (*Fig. 2*).

Architectural Concept

The concept of "short paths" is also realized within the fair ground itself; the eight exhibition halls, the parking bridges, etc., are arranged along an east-west axis parallel to the airport in a manner which consumes a minimum of ground space combined with maximum functionality (*Fig. 2*).

One of the main features of this layout is the possibility for delivery vehicles to completely cross the fair ground in north-south direction and reach every exhibition hall due to the inclined fair ground topography.

The roofs of both the halls and the parking bridge are partly landscaped and thus create – in combination with the inner fair garden – a continuous green space crossing the motorway, well embedded within the surrounding countryside.

The hanging roofs of the eight exhibition halls have a curved and very unique appearance. The asymmetrical roof design of the seven equal Standard Halls guarantees an improved orientation for the visitors inside the halls.

The Grand Hall, spanning approximately twice the area of the standard type, has also been laid out for large sports and cultural events. A gallery level, entirely surrounding the ground floor exhibition space, provides further space.

Architectural Contest

The architectural concept is the successful result of a contest which took place in 1999. An interactive and fruitful cooperation between the architect, the landscaping architect, and the structural engineer led to a

Fig. 1: Steel construction of a Standard Exhibition Hall

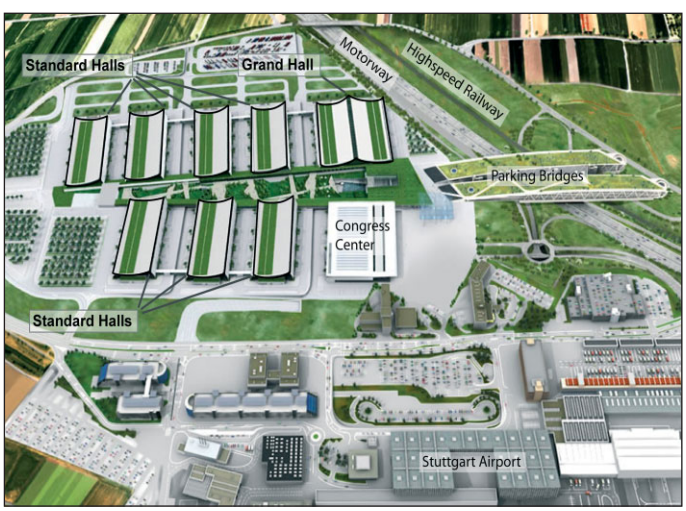

Fig. 2: Project layout overview and infrastructure

result which in effect shows a highly integrative level of architecture and structure.

The Stress-Ribbon for Long-Span Roof Structures

Lightweight Construction

Per se, there exists no clear, distinctive solution for a structural system, depending on a given free span. Yet, the importance of a structure's weight increases progressively with span length. Hence, dead load substantially affects the structural design of the load bearing structure including the foundations; thus it has a considerable influence on the construction method and the overall costs.

Therefore, to minimize construction weight, it is favorable to design a structure which is mainly loaded by tensile stresses, avoiding unnecessary material required for stability, and which carries tensile forces over long paths and necessary compression forces via short paths.

Moreover, it is favorable to avoid bending moments where possible, both in main structural members and in connections. Also, the application of high strength materials (with low specific density) and the use of the building enclosure (e.g. façade) for global load bearing purposes contribute to a reduction of construction weight.

The suspended roof formed by the regular repetition of a stress-ribbon, i.e., a ribbon which is stressed between two rigid supports like a cable, is considered one of the most efficient large-span structural systems in terms of material consumption [1]. Its form is determined by its loading, equivalent to the catenary arch, resulting in an ideal use of the cross sectional area (solely normal forces occurring). In addition, the use of a ribbon avoids problems of local stability.

Yet, it should be mentioned – as a matter of fact regarding lightweight construction which is not self-anchored – that extreme reduction of construction weight of the roof structure itself leads to the necessity of a higher sophisticated foundation design, anchoring high tensile forces.

Form-Finding Procedure

As a basic structure, a cable or ribbon without bending stiffness spans between two rigid supports. The form-finding can be accomplished using an iterative computer program which applies the force-density-method [2]. The final two-dimensional curve of a ribbon is determined by:

- the coordinates of the two supports;
- a third coordinate defining maximum cable sag, and;
- the load distribution along the structure.

In order to account for support flexibilities and secondary structural elements, further iterations must be done within a three dimensional structural analysis program to determine the final geometry of the stress ribbon.

For an entire roof, a geometry of double curvature must be created to guarantee a sufficient gradient for water drainage, even under extreme loading conditions. Hence, the sag of the ribbons must be increased from the middle to the rim of the roof.

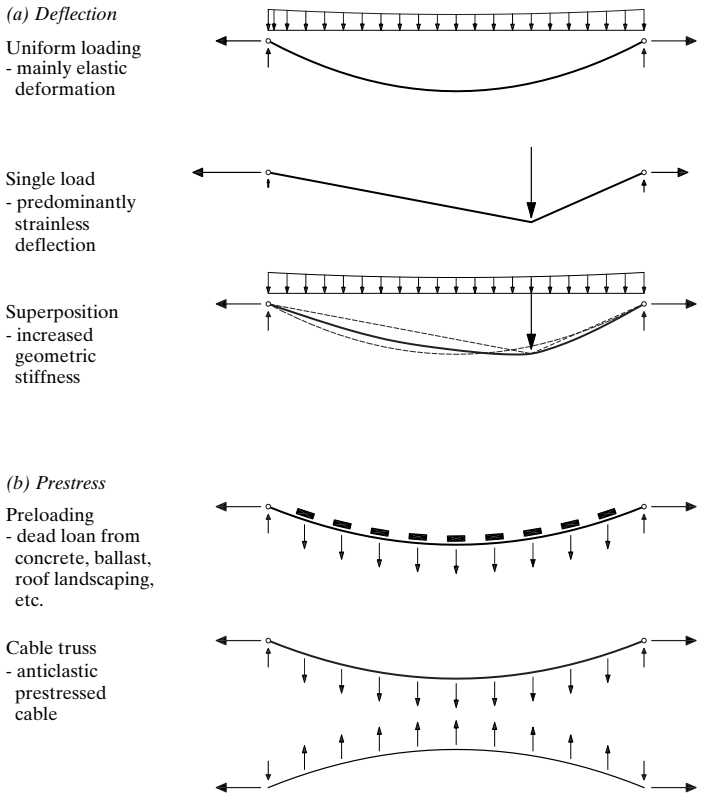

Fig. 3: Stress-ribbon principle

Restriction of Excessive Deformations

The use of the stress-ribbon leads to a very light and aesthetic structure. Yet, to avoid excessive, partly strainless deformations (strainless change of shape, known from cable statics) caused by non-uniform distributed loads like snow sag or suspended live loads (demanded by the building owner during exhibitions) and by uplift wind loading (wind suction), the following provisions were taken:

- Dead load preloading counteracting wind suction and increasing geometric stiffness (*Fig. 3a*). Here, parts of the roof are covered with granular material for roof landscaping.
- Prestressed cable truss to resist wind suction and avoid strainless deformations of the ribbon (*Fig. 3b*). The application of a cable truss with diagonal cables further reduces no-strain deformations.
- Stress ribbon cross-section having a certain amount of bending stiffness to limit local deformations, leading to an improved distribution of local wind suction peaks and of suspended live loads.
- High stiffness of the supporting structure, i.e., using composite columns with high strength concrete, encased by circular hollow sections (limiting both creep and shrinkage), prestressed concrete abutment walls, prestressed ground anchors, and dead load camber for all structural steel work.

Standard Exhibition Halls

Structural System Overview

The seven *Standard Halls* basically consist of a steel structure which is placed

upon a concrete foundation structure. The roof covers an area approximately 70 m by 155 m. At the A-shaped strut-and-tie supports at each side of the roof, longitudinal foundation channels – also intensely used for building service installations – are arranged to transfer compression and tensile forces into the ground, making use of foundation plates and prestressed ground anchors, respectively. In between these foundations, a floor plate is provided for the main exhibition space; no basement stories are provided here because of the requirement for heavy live loading (see *Figs. 4* and *5*).

Stress-Ribbons

The roof structure consists of equally spaced stress ribbons (at 6,75 m) which are pin-connected to the boundary trusses at the longitudinal sides (*Fig. 5a*).

The different geometries of the ribbons with respect to the axis of symmetry generate a double curved roof geometry to allow for water drainage at both front sides.

The stress-ribbon was formed from a slim double-T shape (instead of a flat steel band, increasing bending stiffness and therefore allowing erection of the roof panels without scaffolding) which is made of high performance steel S460 (yield strength 460 MPa).

Roof Shell

The load bearing roof shell, spanning transversely to the ribbons, consists of a composite section which is made of a trapezoidal sheet metal and a thin metal sheet on top, connected by blind rivets. The ultimate load capacity as well as the nonlinear shear stiffness was determined by four-point bending

Fig. 6: Roof shell, shear test

tests (for composite action) and shear tests (*Fig. 6*) [2].

A damping system between the roof and the glazed front-side façade (along the boundary stress-ribbon) was developed to allow for controlled movement of the stress-ribbon in the façade plan (i.e. 100 mm downward and 20 mm upward deflection) and hence limit the introduction of forces into the façade. After this displacement, the façade structure is activated.

Boundary Trusses

The longitudinal boundary trusses, inclined tangentially to the roof geometry, transfer loads from the ribbons to the A-shaped end trestles. Since the boundary girders, which are made of circular hollow sections with direct welded connections, are located outside the building enclosure, differential deformations due to temperature are compensated by maintenance-free slide bearings in the chords, in between the trestles.

Cable Trusses

At the A-shaped end supports a pair of cable trusses is formed with the stress-ribbons by a fully locked tension rope, connecting to the ribbon with diagonal spiral ropes, vertical posts, and a main cable clamp, which directly connects at the maximum sag point of the roof (*Fig. 5b*).

Various angles between diagonal ropes and the lower tension cable would have demanded different clamping details, some becoming quite large and unaesthetic because of small angles. Therefore, a new type of cable-truss clamp with a hinged connection between cable and post was developed (*Fig. 7*). This clamp could be applied universally to all four way connections of the cable truss.

A-Shaped Strut-and-Tie Supports

The A-shaped end trestles consist of steel-concrete composite sections, having a double-T shape core steel section – due to fire resistance requirements – and a thin circular pipe as the outer section. The head of the trestle, where vertical strut and inclined tie merge, was formed by designing an organic section using cast steel shells (shown in *Fig. 1*).

The interface between structural steelwork and concrete construction was laid out to uncouple the construction of the two, since these are usually carried out independently by different contractors. This was accomplished by a socket within the prestressed abutment wall, where the composite section of the inclined tie is introduced and anchored by cylindrical steel bracket half-shells (*Fig. 8*).

Foundation

The tendons within the prestressed wall transfer tensile forces to the bottom of the base plate, where a lateral distribution is achieved by compression fields within the plate, having a thickness of up to 2,20 m. All load-transfer design within the concrete was done applying simple three dimensional strut-and-tie models which are of common use in Germany today.

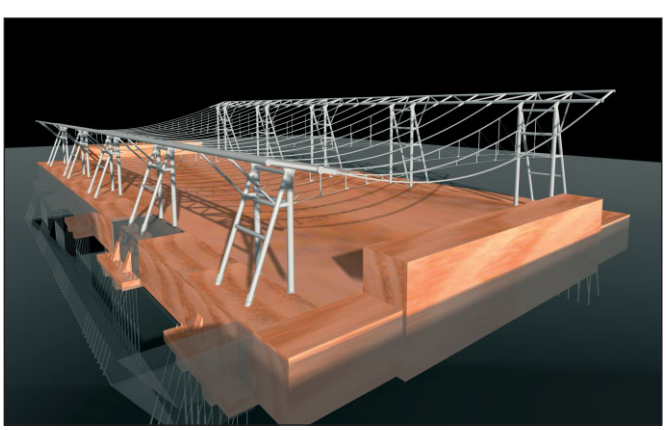

Fig. 4: Standard Hall – isometry of structural system

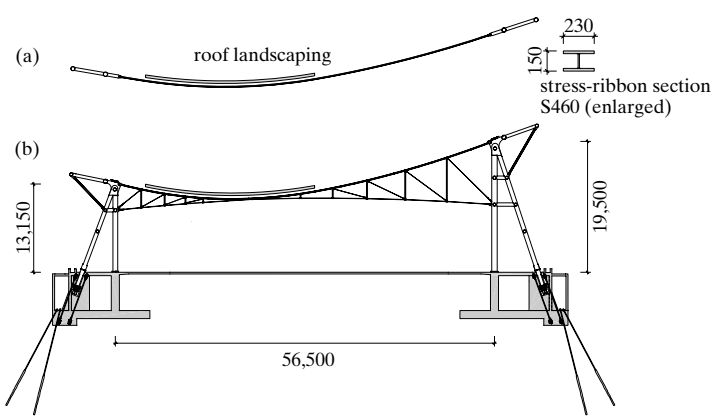

Fig. 5: Standard Hall – cross sections (Units: m)

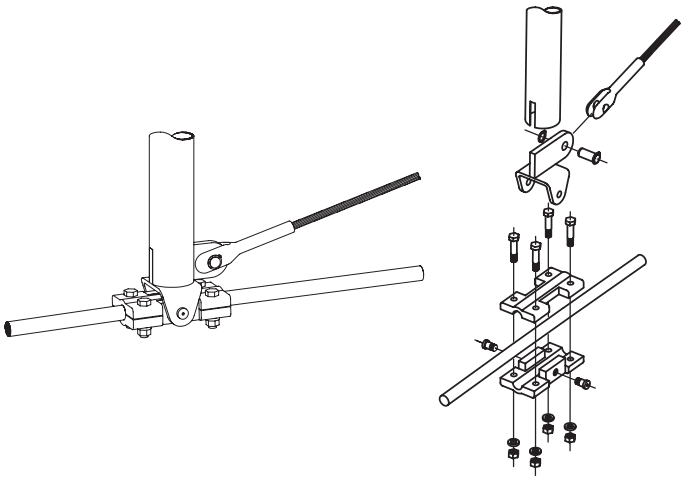

Fig. 7: Cable truss clamp

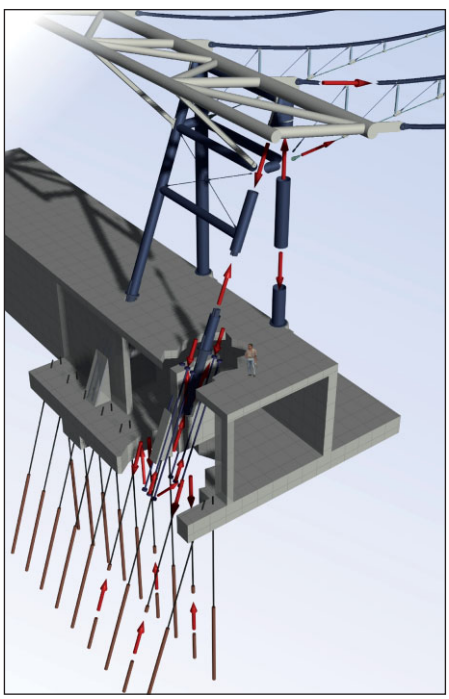

Fig. 8: End trestle and foundation

Soil anchors transfer tension forces from the base plate into the ground (*Fig. 8*). The soil anchors remain accessible after completion of the building and can be readjusted (retensioned) if ground settlement is observed. Compression sensors at anchor heads will keep track of the ground anchor prestress where train tunnels cross below the foundations.

Grand Exhibition Hall

Development of the Structure

The Grand Exhibition Hall was basically derived from the Standard Hall by symmetric combination, i.e., the Standard type was mirrored longitudinally, replacing the adjacent rows of end trestles by a longitudinal long-span structure, which is referred to as the main girder (*Fig. 9a*). It couples horizontal forces of both the stress-ribbons and the cable truss tendons of the two roof parts, and transfers vertical loads into two A-shaped support trestles which have a height of 25 m. The inclined members of these trestles act as a horizontal bracing system (*Fig. 9a*).

For aesthetic reasons, the main girder, having a total length of 155,25 m (*Fig. 9b*), was planned to have a light circular geometric camber of one meter (in addition to the dead load camber).

The Main Girder

The main girder (*Figs. 9b* and *10*), a three-chord truss with a static height of 9 m, has a main span of 114,75 m and two back-spans of 20,25 m. Tied bars at each back-span are connected to a prestressed pillar within the concrete construction. The three-chord truss has a high torsional stiffness, necessary when the roof is loaded asymmetrically.

The main girder consists of hollow pipe sections (diameter of chords: 711 mm) using high performance steels S460 and S690 (yield strength 690 MPa), mainly joined by direct welding connections, one of the simplest ways of pipe-connection. Besides the reduction of dead load, one of the main advantages of the

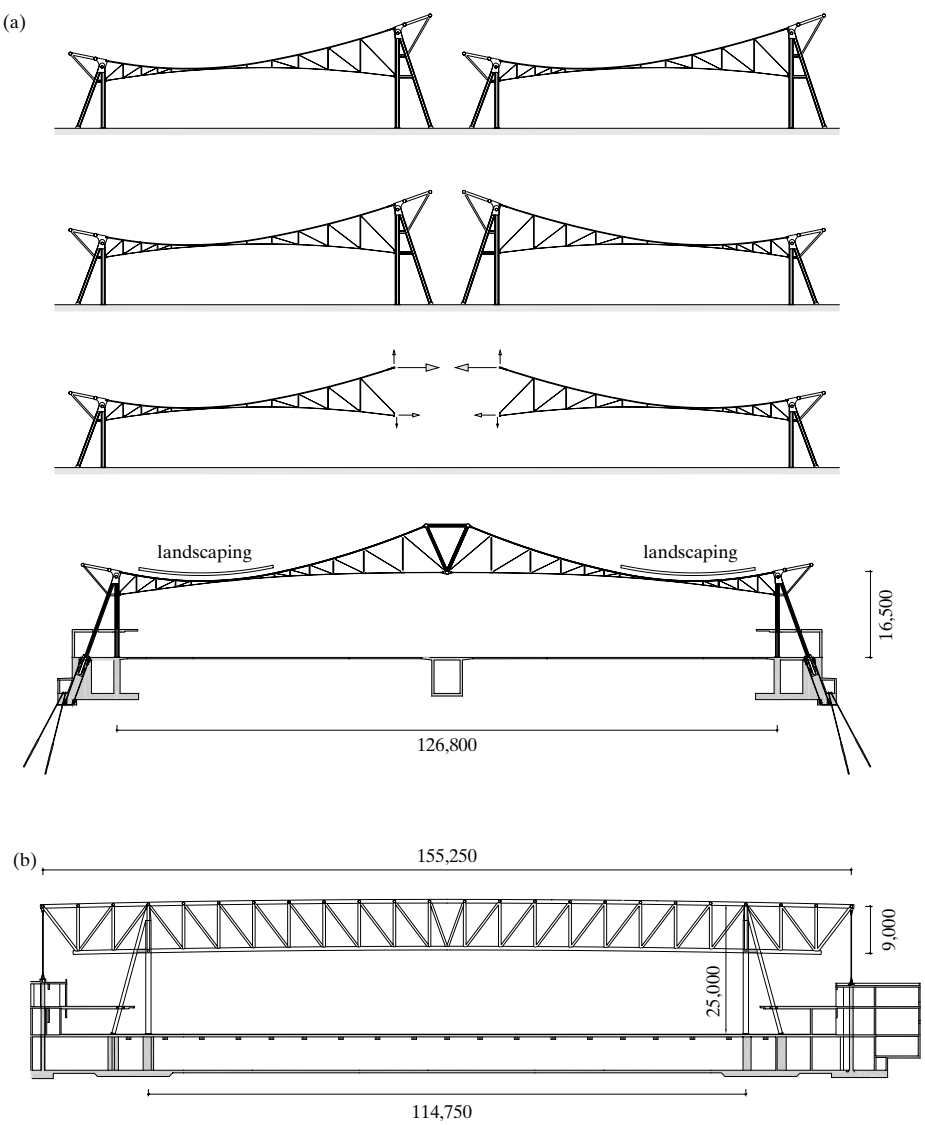

Fig. 9: Grand Hall – development of structural system (Units: m)

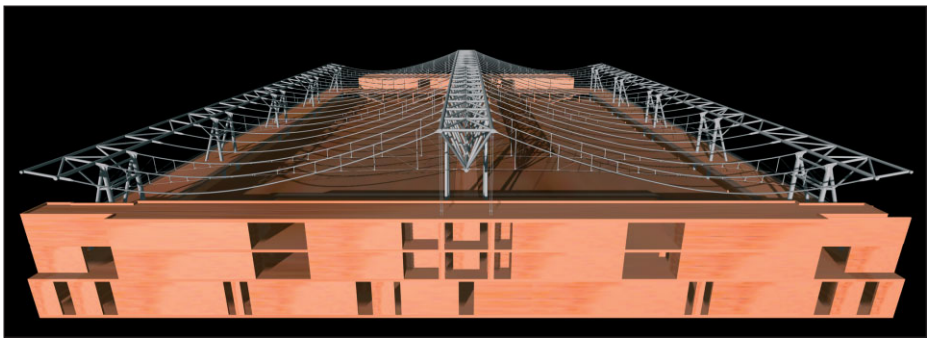

Fig. 10: Grand Hall – isometry of structural system

Fig. 12: Preloading of stress-ribbons

application of high performance steel is the reduction of welding volume.

In order to further minimize steel construction weight, pipe dimensions were determined by regular cross-section design. Therefore, connections in a few higher stressed locations had to be upgraded to reach a sufficient joint strength. This was done by the following concept: at the two upper chords, pipes with increased wall thickness were applied locally, if necessary. At the lower single chord, due to limited availability of wall thicknesses of tubes, Y-shaped gusset plates were introduced for both the stiffening of the chord and the provision of an additional load path.

Structural connection design was initially done using the semi-empirical design formulas for directly welded pipe connections provided by the CIDECT (*Comité International pour le Développement et l'Etude de la Construction Tubulaire*) [4, 5]. Yet, validity ranges are rather narrow if three-dimensional connections are concerned.

Hence, several joints additionally had to be checked by finite element simulations (*Fig. 11*).

Fabrication and Erection

Prefabrication of Stress-Ribbons

Due to the double curved geometry of the roof, 12 stress-ribbons of different geometry (i.e. length and maximum sag are variable) had to be fabricated (for each type of hall). The different ribbon geometries were pre-bent in the shop to obtain the stress-free geometry which was calculated from the required geometrical design form.

Pre-bending was necessary because of the bending rigidity of the steel shape; it guaranteed a more exact result of the built geometry.

Each stress-ribbon was delivered to the building site in three parts, connected on the ground by welding, lifted to its final position, and connected to the pin joint connection plates of the trusses by a single bolt at each end.

To be able to compensate for construction tolerances, an adjusting mechanism was provided at one end of the ribbons. After surveying and adjusting the length, the joint was closed by welding and the mechanism was removed.

Preloading of Roof

Directly after the stress-ribbons had been erected, they were preloaded with suspended bags filled with gravel (*Figs. 12* and *14*).

This was necessary before the erection of roof shell and façade in order to:

- compensate for the missing dead load of the green roof segment and so minimize shear stress within the roof shell due to dead load displacement after installation of the roof shell;
- secure the roof against wind suction during construction, and;
- achieve a form that is close to the end geometry at an early stage, for the ease of connection design of façade elements.

Prestressing of Ground Anchors

Foundation analysis showed that the amount of prestress of the ground anchors has a significant effect on the inclination of the foundation, and hence, on that of the steel structure supporting A-shaped trestles.

Therefore, prestressing of ground anchors during erection was conducted in stages depending on the current stage of construction.

Erection of Grand Hall Main Girder

The assembly of the main girder was completely done on site, directly below its final position in plan. Therefore, the contractor erected a 25 m long fabrication hall, movable on rails along the girder (*Fig. 13*). Segments of the main chords were prefabricated in the shop and delivered to the construction site. All braced members, characterized by complex, three-dimensional end-cuttings due to the connection method of directly welded joints, were pre-cut by the pipe supplier and shipped to site.

The girder was erected in three parts with the use of temporary supports. At first, the two end segments of 33,75 m length were erected, lifted with mobile cranes, and directly joined with the 25 m high supporting trestles (*Fig. 13*). After that, the 87,75 m long middle section was assembled, lifted with mobile cranes in between the end sections, fixed with temporary brackets, and connected by welding.

Concluding Remarks

This project illustrated that an integrated design process between engineer

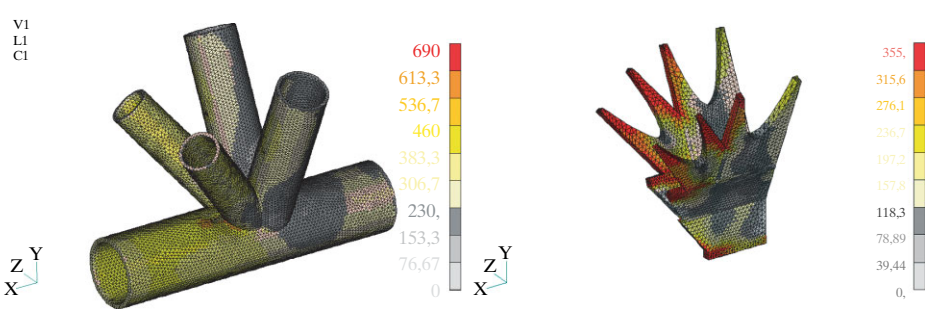

Fig. 11: FEM-Simulation of lower chord detail [6]

Fig. 13: Grand Hall – erection of main girder

Fig. 14: Grand Hall – erection of roof shell

Fig. 15: Standard Halls – completion of façade works

and architect can lead to an aesthetic building which fulfills the architecture – in terms of composition and functionality – and at the same time represents a pure structure articulating the flow of forces (*Fig. 15*).

Dealing with long-span lightweight structures, being also of significant importance to the building owner, the structural engineer is not only challenged by problems uncommon with conventional construction, but also is given the opportunity to develop new approaches and find new solutions.

Acknowledgement

A joint venture, the "*Planungsgemeinschaft Tragwerk*", was formed for this project, including the structural engineering firms *Boll und Partner* (congress center), *Leonhardt, Andrä, und Partner (parking bridges)*, and *Mayr + Ludescher* (exhibition halls), all from Stuttgart.

References

[1] FREI, OTTO. *Das Hängende Dach.* DVA, Stuttgart, 1990.

[2] SCHEK, H. J.; GRÜNDIG, L.; STEIDLER, F. Mathematische Methoden der Netzberechnung und Begründung des Kraftdichteansatzes, International Symposium for Wide Span Surfaces, SFB 64, University of Stuttgart, 1976.

[3] SAAL, H.; DÜRR, M. University of Karlsruhe; Versuchsanstalt f. Stahl, Holz und Steine. Beurteilung der Verwendbarkeit eines genieteten Verbundquerschnitts hinsichtlich der Schubbeanspruchung für die Dachkonstruktion am BV "Landesmesse Baden-Württemberg", 2004, unpublished.

[4] WARDENIER, J.; et al. *Design Guide for Circular Hollow Sections under Predominantly Static Loading (CIDECT Design Guide 1)*, TÜV-Verlag GmbH, Cologne, Germany, 1991.

[5] prEN1993-1-8:2003; Eurocode 3: Bemessung und Konstruktion von Stahlbauten; Teil 1.8: Bemessung von Anschlüssen; Stage 49 draft.

[6] MAYER, U.; OŽBOLT, J. *Bericht über FE-Berechnungen an Rohrknoten eines Fachwerkträgers*, Stuttgart, 2006, unpublished.

SEI Data Block
(exhibition halls):

Owner:
Projektgesellschaft Neue Messe, Stuttgart, Germany

Architect:
Wulf & Associates, Stuttgart, Germany

Landscape Architect:
Adler und Olesch, Nürnberg, Germany

Structural Design:
Mayr + Ludescher Ingenieure, Stuttgart, Germany

Steelwork Contractors:
Krupp Stahlbau Hannover, Hannover, Germany
Haslinger Stahlbau, Feldkirchen, Austria

Structural Steel (t):	11000
Reinforcing Steel (t) :	27000
Concrete (m^3):	140000
Cost (EUR millions):	300
Service date:	June 2007